Catalog # : _____ Project : _____ Type : _____

Prepared By : _____ Date : _____

# LPRX

## Thermoplastic LED Exit Combo

damp location




## QUICK LINKS

Ordering Guide | Dimensions

## FEATURES & SPECIFICATIONS

### Construction

- Injection-molded UL 94 5VA flame retardant, high temperature, thermoplastic housing
- Universal design includes two faceplates, one backplate, and mounting canopy
- All configurations include field-selectable directional chevrons
- Standard finish: White and Black

### Optical System

- Illuminated by long-life, high intensity red or green LEDs
- Fully-illuminated 6” characters with 3/4” stroke
- Two 0.75W LED fully adjustable lamp heads or optional 1.2W LED lamp heads (Option: LD12)

### Electrical

- Standard Universal Voltage - 120/277VAC dual primary at 60Hz
- Brownout circuit monitor (SD2 only)
- Low voltage disconnect eliminates deep discharge (SD2 only)
- Test button to provide manual verification of the transfer circuit and emergency lamps

### Battery

- Maintenance free NiCad Battery
- Operating Temperatures 10°C to 40°C (50°F to 104°F)

### Installation

- Easy snap together design for effortless installation
- Includes mounting canopy for wall and ceiling mount applications

### Warranty

- LSI luminaires carry a 5-year limited warranty. Refer to https://www.lsicorp.com/resources/terms-conditionswarranty/ for more information.

### Listings

- UL 924
- NFPA 101
- NEC
- CEC
- Damp Location Rated
- UL Listed 90 minute emergency run time, 24 hour recharge time


©LSI Industries Inc. All Rights Reserved. Specifications and dimensions subject to industry standard tolerances. Specifications subject to change without notice.

# LPRX Thermoplastic LED Exit Combo

Type : _____

**Have questions?** Call us at (800) 436-7800

## ORDERING GUIDE

Back to Quick Links

**TYPICAL ORDER EXAMPLE: LPRX R U WH LD75 SD2 LD12**

| Prefix | LED Color | # of Faces | Housing Color | Lamp Heads | Options (Factory Installed) |
|---|---|---|---|---|---|
| **LPRX**- Thermoplastic Exit Combo | **R** - Red<br>**G** - Green | **U** - Universal (includes two face plates, back plate, and mounting canopy) | **WH** - White<br>**BK** - Black | **LD75** - 0.75 Watt LED Heads | **SD2 -** Self Test/Self Diagnostic<br>**LD12 -** (2) 1.2W LED Lamps [1]<br>**R15 -** 1.5W Remote Capable [2] |

Need more information?
Click here for our glossary

**Have additional questions?**
Call us at (800) 436-7800

## ACCESSORY ORDERING INFORMATION

| Part Number | Order Number | Description |
|---|---|---|
| 413080 | PK1 WH | 1′ Pendant Mount Kit, White [3] |
| 894762 | PK1 BK | 1′ Pendant Mount Kit, Black [3] |
| 405732 | PK2 WH | 2′ Pendant Mount Kit, White [3] |
| 894761 | PK2 BK | 2′ Pendant Mount Kit, Black [3] |
| 789448 | VEPA | Pendant Adapter |
| 781384 | WGB1 | Wire Guard Back Mount |
| 740928 | PGB1 | Poly Guard Back Mount |

1 Not compatible with remote capable units (R15)
2 Compatible with remote RRL or CRL lamps
3 Requires VEPA accessory option

## PRODUCT DIMENSIONS

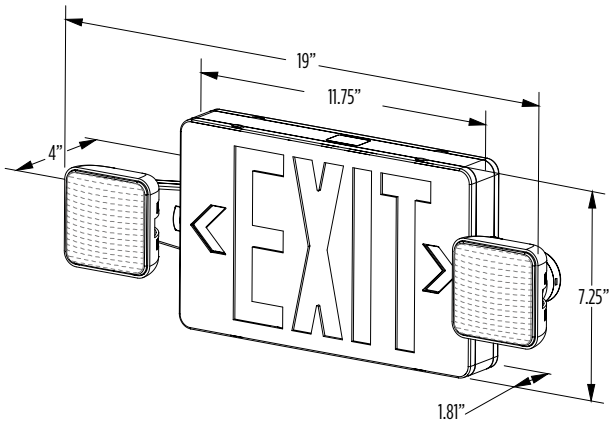


**FOOT CANDLE SPACING**

(Multiple units mounted at a typical 7.5 foot height)

| Model | # of LED Lamps | 3’ Path, 6’ Corridor | 6’ Path, 6’ Corridor |
|---|---|---|---|
| LPRX-LD75-* | 2 | 26’ | 19’ |
| LPRX-LD75-LD12* | 2 | 37’ | 31’ |

*Applicable to all configurations

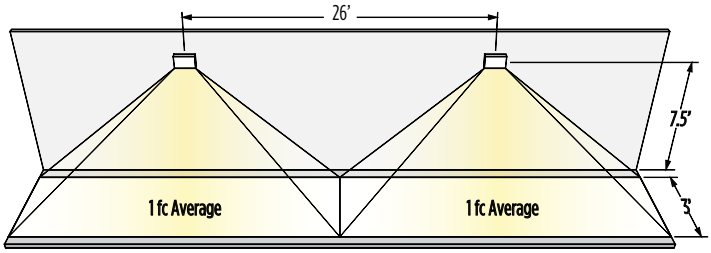


LSI assumes no responsibility for local requirements or specific project variables. This is a guideline to be used as a design aid, not as a guarantee of any code compliance.


©LSI Industries Inc. All Rights Reserved. Specifications and dimensions subject to industry standard tolerances. Specifications subject to change without notice.