Catalog # : _____ Project : _____ Type : _____

Prepared By : _____ Date : _____

Advantage Downlight Wet Location (ADLW)

Field Selectable. 90 CRI min.



OVERVIEW	
Lumen Package (lm)	900 - 5,000
Wattage (W)	9 - 50
Efficacy Range (LPW)	94 - 124
Color Temperature (K)	2700, 3000, 3500, 4000, 5000
Fixture Weight lbs (kg)	1.3 (0.6) – 2.8 (1.3)

QUICK LINKS

Ordering Guide | Performance | Photometrics | Dimensions

FEATURES & SPECIFICATIONS

Construction

- 16 gauge spun aluminum reflector housing.
- 4", 6", 8" reflectors.
- Operating temperature: -20°C to 40°C (-4°F to 104°F)
- Standard reflector and trim finish is White.
- Optional new construction frame kit.

Optical System

- Selectable lumen output to suit a wide range of mounting heights.
- Selectable CCT for maximum flexibility –2700-3000-3500-4000-5000K.
- Minimum color rendering index (CRI) of 90 for high visual acuity.
- Semi-diffuse lens for the ideal combination of optical efficiency and uniformity.
- Custom engineered reflectors for wide distribution.

Electrical

- Constant current, Class 2 driver.
- Selectable power to maximize energy savings.
- 0-10V dimming (10% - 100%) standard.
- Universal 120-277V 50/60Hz AC input.
- L70 Calculated Life: >50k hours
- Power factor: > 0.90
- Total harmonic distortion: <20%
- Optional 8W remote battery backup for standby lighting (90min.).

Controls

- 0-10V dimming standard.
- Compatible with most 0-10V dimmers.

Installation

- Effortless installation using high-tension retention clips.
- Direct mount, or with frame kit installed on drywall or T-Grid.
- Field selectable output and CCT before, during or after installation.
- Suitable for retrofit applications standard. Optional new construction frame kit available as an accessory.

Warranty

- LSI luminaires carry a 5-year limited warranty. Refer to https://www.lsicorp.com/resources/terms-conditions-warranty/ for more information.

Listings

- ETL/cETL Suitable for wet locations (below ceiling only).
- Title 24 Compliant; see local ordinance for qualification information.
- Energy Star listed.
- IC-rated for direct contact with insulation (6" only).

©LSI Industries Inc. All Rights Reserved. Specifications and dimensions subject to industry standard tolerances. Specifications subject to change without notice.

Advantage Downlight Wet Location (ADLW)

Type : _____

Have questions? Call us at (800) 436-7800

ORDERING GUIDE

Back to Quick Links

TYPICAL ORDER EXAMPLE: ADLW 6 FS1 UNV

Prefix	Size	Light Output & CCT/CRI	Voltage	Flange Finish	Controls	Options
ADLW - Advantage Downlight Wet Location, Self Flanged[2]	**4** - 4"	**FS1** - 900 - 1,400 - 1,800lm 2700K-3000K-3500K-4000K-5000K, 90 CRI min.	**UNV** - 120-277V 0-10V dimming (10-100%)	**Blank** - White	**Blank** - None *Remote options available for controls.	**Blank** - None *Remote options available for Emergency Battery Backup.
	6 - 6"	**FS1** - 1,100 - 1,600 - 1,800lm 2700K-3000K-3500K-4000K-5000K, 90 CRI min.				
	8 - 8"	**FS2** - 3,500 - 4,400 - 5,000lm[1] 2700K-3000K-3500K-4000K-5000K, 90 CRI min.				

Need more information?
Click here for our glossary

Have additional questions?
Call us at (800) 436-7800

1 FS2 only available for 8" size.
2 Wet Location Rated from Below the Ceiling — Not Suitable for Open-Canopy Applications.

ACCESSORY ORDERING INFORMATION

Part Number	Order Number	Description
Mounting Support	**786278**	New Construction Frame Kit (Fits all Trim Sizes)
	814080	New Construction Wiring Box with MC Cable
Emergency (Remote Only)	**778196**	8W Remote Mount Battery
Trims	**CDL4TBB**	4" Black Trim and Baffle
	CDL6TBB	6" Black Trim and Baffle
	CDL8TBB	8" Black Trim and Baffle

*Baffle held in place by trim ring with foldable tabs.

CONTROLS

Back to Quick Links

See available control options at https://lsicorp.com/lighting/products/controls/control-systems/airlink-blue/

©LSI Industries Inc. All Rights Reserved. Specifications and dimensions subject to industry standard tolerances. Specifications subject to change without notice.

Advantage Downlight Wet Location (ADLW)

Type : _____

Have questions? Call us at (800) 436-7800

PERFORMANCE

Back to Quick Links

Delivered Lumens*

Lumen Package	CRI	2700K CCT		3000K CCT		3500K CCT		4000K CCT		5000K CCT		Wattage
		Delivered Lumens	Efficacy	Delivered Lumens	Efficacy	Delivered Lumens	Efficacy	Delivered Lumens	Efficacy	Delivered Lumens	Efficacy	
ADLW 4	≥ 90	976	104	1008	107	1044	111	1057	112	1058	113	9
		1433	103	1480	107	1533	110	1553	112	1553	112	14
		1833	101	1894	105	1961	108	1986	110	1987	110	18
ADLW 6	≥ 90	1151	114	1189	118	1232	122	1247	124	1248	124	10
		1685	114	1741	118	1804	122	1826	123	1827	123	15
		1752	114	1810	118	1875	122	1899	123	1900	123	15
ADLW 8	≥ 90	3467	99	3582	103	3710	106	3757	108	3759	108	35
		4104	97	4241	100	4392	103	4448	105	4450	105	43
		4671	94	4827	97	4999	101	5062	102	5065	102	50

*LEDs are frequently updated therefore values are nominal.

Electrical Data - Current Draw AMPS*

Lumen Package	Wattage	120V	277V
ADLW 4	9	0.08	0.04
ADLW 4	14	0.13	0.05
ADLW 4	18	0.17	0.07
ADLW 6	10	0.08	0.04
ADLW 6	15	0.13	0.05
ADLW 6	16	0.17	0.07
ADLW 8	35	0.29	0.13
ADLW 8	42	0.35	0.15
ADLW 8	49	0.43	0.19

*Electrical data at 25C (77F). Actual wattage may differ by +/-10%.

CCT Proration - ADLW 4

2700K	0.923
3000K	0.954
3500K	0.988
4000K	1.000
5000K	1.001

CCT Proration - ADLW 6

2700K	0.942
3000K	0.960
3500K	0.983
4000K	1.000
5000K	1.017

CCT Proration - ADLW 8

2700K	0.890
3000K	0.936
3500K	0.987
4000K	1.000
5000K	0.995

Lumen Maintenance - ADLW4

Ambient Temp C	Initial [2]	25k hr [2]	50k hr [2]	75k hr [3]	100k hr [3]
0 C	100%	93%	86%	80%	74%
5 C	100%	93%	86%	80%	74%
10 C	100%	93%	86%	80%	74%
15 C	100%	93%	86%	80%	74%
20 C	100%	93%	86%	80%	74%
25 C	100%	93%	86%	80%	74%
30 C	100%	93%	86%	80%	74%
35 C	100%	92%	85%	79%	73%
40 C	100%	92%	85%	78%	72%

Lumen Maintenance - ADLW6

Ambient Temp C	Initial [2]	25k hr [2]	50k hr [2]	75k hr [3]	100k hr [3]
0 C	100%	93%	86%	80%	74%
5 C	100%	93%	86%	80%	74%
10 C	100%	93%	86%	80%	74%
15 C	100%	93%	86%	80%	74%
20 C	100%	93%	86%	80%	74%
25 C	100%	93%	86%	80%	74%
30 C	100%	93%	86%	80%	74%
35 C	100%	93%	86%	80%	74%
40 C	100%	93%	86%	80%	74%

Lumen Maintenance - ADLW8

Ambient Temp C	Initial [2]	25k hr [2]	50k hr [2]	75k hr [3]	100k hr [3]
0 C	100%	93%	86%	80%	74%
5 C	100%	93%	86%	80%	74%
10 C	100%	93%	86%	80%	74%
15 C	100%	93%	86%	80%	74%
20 C	100%	93%	86%	80%	74%
25 C	100%	93%	86%	80%	74%
30 C	100%	92%	86%	79%	73%
35 C	100%	92%	85%	79%	73%
40 C	100%	92%	85%	78%	72%

1 Lumen maintenance values at 25C are calculated per TM-21 based on LM-80 data and in-situ testing.
2 In accordance with IESNA TM-21-11, Projected Values represent interpolated value based on time durations that are within six times the IESNA LM-80-08 total test duration for the device under testing.
3 In accordance with IESNA TM-21-11, Calculated Values represent time durations that exceed six times the IESNA LM-80-08 total test duration for the device under testing.

©LSI Industries Inc. All Rights Reserved. Specifications and dimensions subject to industry standard tolerances. Specifications subject to change without notice.

Advantage Downlight Wet Location (ADLW)

Type : _____

Have questions? Call us at (800) 436-7800

PHOTOMETRICS

Back to Quick Links

Luminaire photometry has been conducted by a NVLAP accredited testing laboratory in accordance with IESNA LM-79-08. As specified by IESNA LM-79-08 the entire luminaire is tested as the source resulting in a luminaire efficiency of 100%.

See the individual product page on https://www.lsicorp.com/ for detailed photometric data.

ADLW4-FS1-1500lm-40

Zonal Lumen Summary		
Zone	Lumens	%Fixture
0-20	275.75	17.8
0-30	575.17	37
0-40	897.67	57.8
0-60	1362.67	87.7
0-80	1534.59	98.8
0-90	1553.15	100
10-90	1482	95.4
20-40	621.92	40
20-50	897.22	57.8
40-70	575.09	37
60-80	171.92	11.1
70-80	61.82	4
80-90	18.56	1.2
0-180	1553.15	100

Candela Table	
Degree Vertical	Candela
0	748
5	749
10	743
15	730
20	700
25	656
30	593
35	518
40	439
45	360
50	279
55	212
60	152
65	107
70	81
75	58
80	36
85	16
90	0

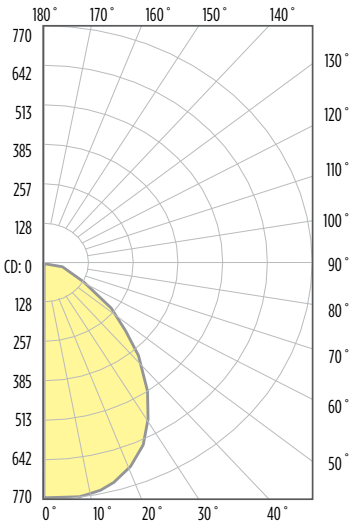

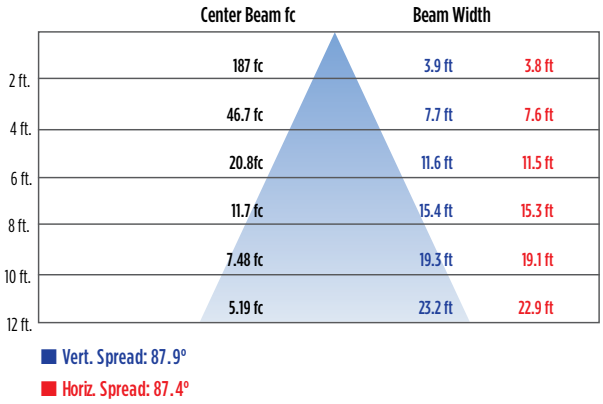

©LSI Industries Inc. All Rights Reserved. Specifications and dimensions subject to industry standard tolerances. Specifications subject to change without notice.

PHOTOMETRICS

Back to Quick Links

ADLW6-FS1-1600lm-40

Lumens: 1703
CCT: 4000K
Watts: 15
Efficacy: 114

Zonal Lumen Summary		
Zone	**Lumens**	**%Fixture**
0-20	271.03	16.7
0-30	574.73	35.3
0-40	916.55	56.4
0-60	1434.61	88.2
0-80	1606.2	98.8
0-90	1626.4	100
10-90	1556.65	95.7
20-40	645.51	39.7
20-50	949.69	58.4
40-70	631.94	38.9
60-80	171.59	10.6
70-80	57.71	3.5
80-90	20.2	1.2
0-180	1626.4	100

Candela Table	
Degree Vertical	**Candela**
0	732
5	732
10	727
15	712
20	693
25	663
30	613
35	549
40	476
45	394
50	315
55	240
60	171
65	112
70	74
75	54
80	37
85	19
90	0

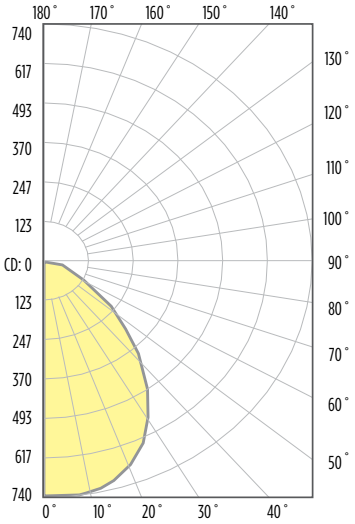

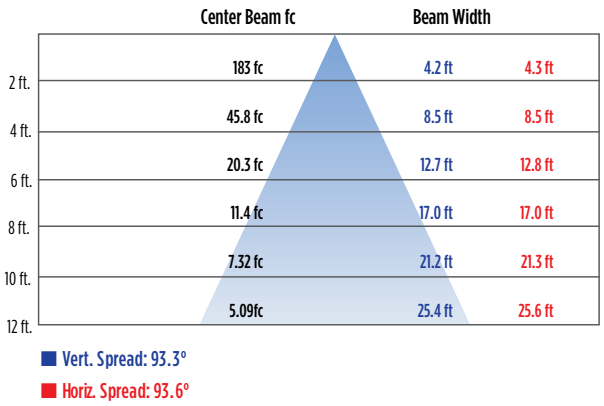

ADLW8-FS1-4400lm-40

Lumens: 4525
CCT: 4000K
Watts: 42
Efficacy: 107

Zonal Lumen Summary		
Zone	**Lumens**	**%Fixture**
0-20	746.19	16.8
0-30	1586.93	35.7
0-40	2546.79	57.3
0-60	3977.76	89.4
0-80	4397.87	98.9
0-90	4447.97	100
10-90	4256.04	95.7
20-40	1800.6	40.5
20-50	2653.25	59.7
40-70	1711.89	38.5
60-80	420.12	9.4
70-80	139.2	3.1
80-90	50.1	1.1
0-180	4447.97	100

Candela Table	
Degree Vertical	**Candela**
0	2015
5	2017
10	2001
15	1967
20	1911
25	1829
30	1711
35	1541
40	1339
45	1115
50	870
55	644
60	439
65	273
70	175
75	132
80	89
85	47
90	0

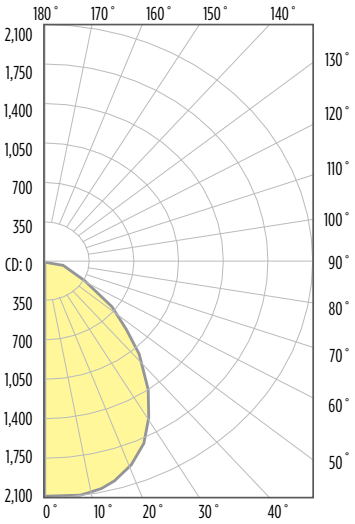

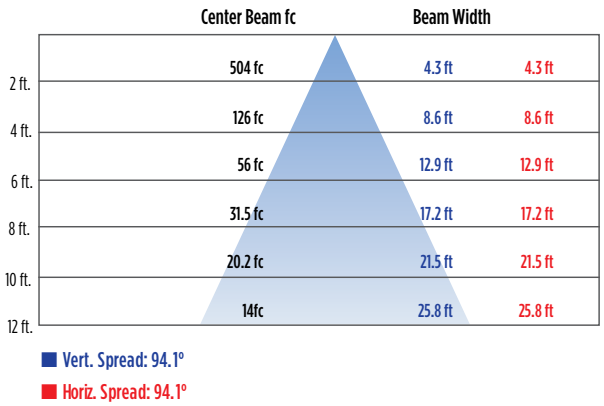

©LSI Industries Inc. All Rights Reserved. Specifications and dimensions subject to industry standard tolerances. Specifications subject to change without notice.

Advantage Downlight Wet Location (ADLW)

Type : _____

Have questions? Call us at (800) 436-7800

PRODUCT DIMENSIONS

4" - Weight: 1.25 lbs

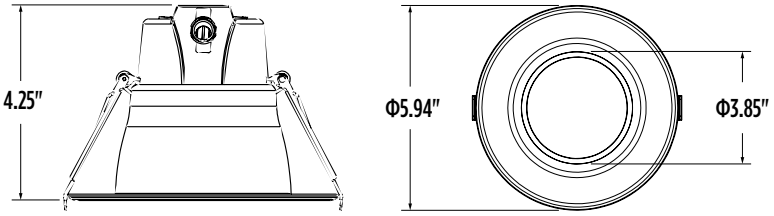

6" - Weight: 1.99 lbs

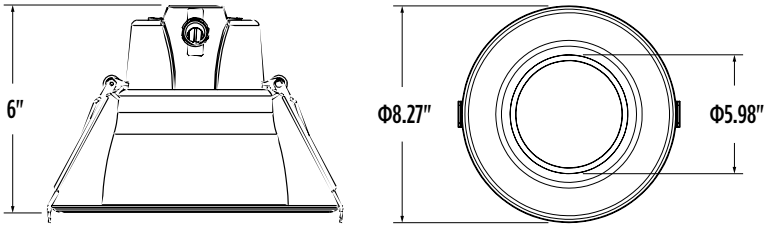

8" - Weight: 2.83 lbs

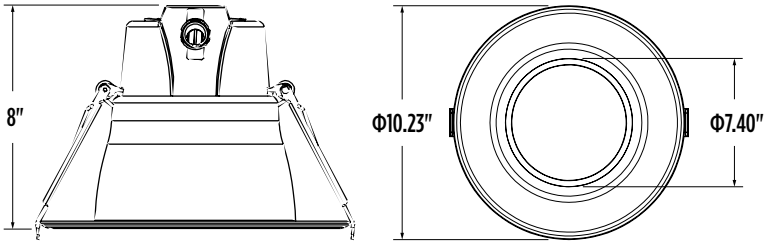

Wiring Box

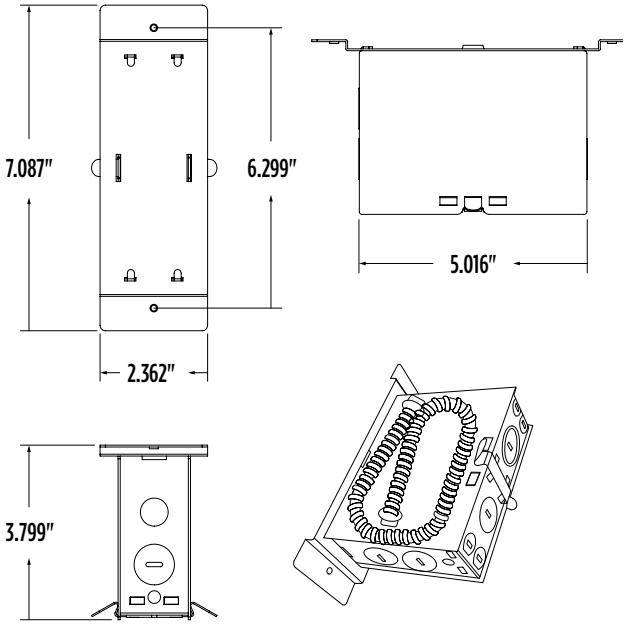

New Construction Frame Kit

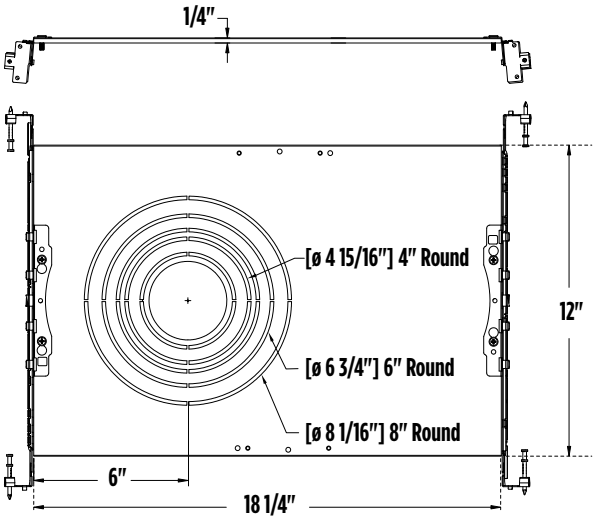

©LSI Industries Inc. All Rights Reserved. Specifications and dimensions subject to industry standard tolerances. Specifications subject to change without notice.