REMOTE REFRIGERATION CATALOG

MANUFACTURED IN THE USA

ONE PARTNER. COMPLETE REFRIGERATION SOLUTIONS.

Together with Carter, LSI brings customers a broader refrigerated display offering that now includes **remote refrigeration solutions**. This expanded portfolio provides more choice, greater design flexibility, and stronger support for creating high performing grocery and retail environments.







FD Display

Full Glass Door

PRODUCT OVERVIEW

Our full height glass doored display combines sleek aesthetics with powerful performance, making it the ultimate frozen food solution for modern stores. Includes (5) 21 ⅝” deep shelves including price tag molding as standard.

Choose from water-cooled, air-cooled and remote refrigeration options.

Available in 2, 3, 4 and 5 door options.



FEATURES

- Frozen food - 75F @55%RH
- Remote, Air Cooled, and Water Cooled options
- Available in 2 , 3, 4 and 5 door options
- Danfoss or RDM
- Solid or wire shelves
- Vertical lighting
- End walls specified per customer
- (5) 21 ⅝” shelves
- Price tag molding and optional shelf risers
- EC EBM fans
- Electronic controller
- Mullion lighting
- Automatic defrost
- Multiplexable
- Solenoid valves as standard
- RAL exterior specified per customer
- RAL interior specified per customer
- End user specific colors and finishes available

DIMENSIONS

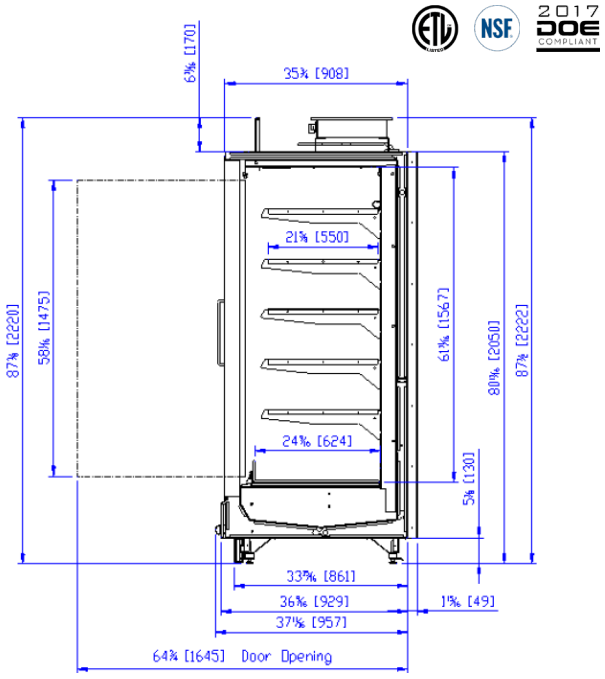

Model	Height	Width (Ex. End)	End Wall Thickness	Depth
5DR FD Display	81”	157 ⅛”	2”	36 ⅝”
4DR FD Display	81”	122 ⅞”	2”	36 ⅝”
3DR FD Display	81”	92 ⅛”	2”	36 ⅝”
2DR FD Display	81”	61 ⅜”	2”	36 ⅝”

IB Display

Multi Deck

PRODUCT OVERVIEW

The IB is our deepest open multi deck case designed for large format stores. It is high performance, high efficiency commercial refrigeration solution engineered for maximum merchandise capacity and product visibility.

Designed for flexibility and sustainability, the IB is configured for use with HFC or CO2 direct expansion rack system, or as an R290 water cooled integral solution where racks are not applicable.

Available in 4', 6', 8' and 12' lengths.



DIMENSIONS

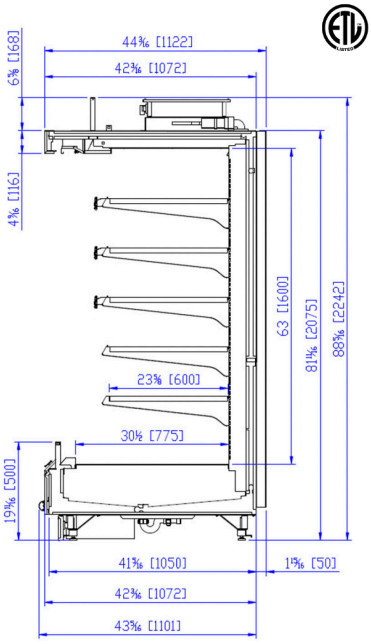

FEATURES

- Temperature range 32F/39F
- R744: Remote
- HFC: Remote
- R290: Self-contained
- Solid, mirrored end walls
- Plexiglass dividers or intermediate ends available for segmentation
- (5) 23 ⅝" shelves
- Various control strategies available
- Canopy and shelf lighting
- Night-blind
- Range of all real colors available
- Aerofoil technology available as an ancillary

Model	Height	Width (Ex. End)	End Wall Thickness	Depth
12' IB Display	82"	144"	1 ¼" & 2"	42 ¼"
8' IB Display	82"	96"	1 ¼" & 2"	42 ¼"
6' IB Display	82"	72"	1 ¼" & 2"	42 ¼"
4' IB Display	82"	48"	1 ¼" & 2"	42 ¼"

IC Display

Multi Deck

PRODUCT OVERVIEW

Designed for maximum product exposure and efficient fresh storage, our full height multi deck case is a staple solution for modern main store environments.

This full height remote multi deck display comes with (5) 19 ¾" deep shelves including standard price tag molding. Available with doors.

Available in 4', 6', 8' and 12' lengths.



FEATURES

- Temp. Class 3M1 (32F/41F) for Dairy
- Temp. Class 3M0 (32F/39F) for Meat
- R744 refrigerant
- Danfoss or RDM
- Vertical lighting
- Solid, mirrored end walls
- Plexiglass dividers or intermediate ends available for segmentation
- (5) 19 ¾" shelves
- Price tag molding, optional shelf risers
- EC EBM fans
- Electronic controller
- Canopy lighting
- Automatic defrost
- Night-blind
- Multiplexable
- Solenoid valves as standard
- Aerofoil technology available as an ancillary
- RAL exterior specified per customer
- RAL interior specified per customer

DIMENSIONS

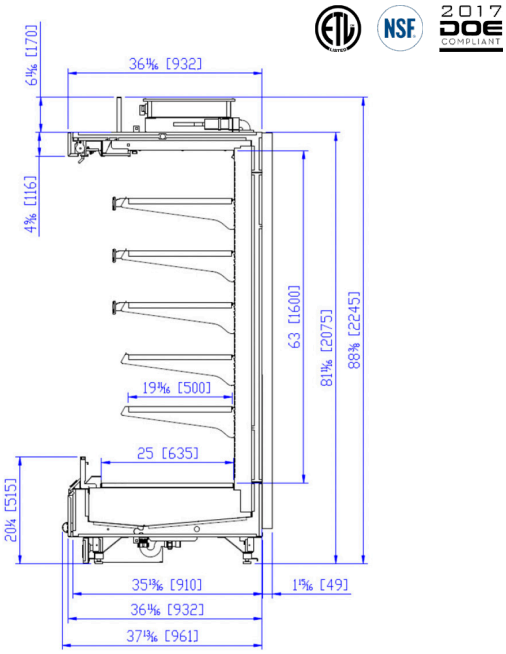

Model	Height	Width (Ex. End)	End Wall Thickness	Depth
12' IC Display	82"	144"	1 ¼" & 2"	36 ¾"
8' IC Display	82"	96"	1 ¼" & 2"	36 ¾"
6' IC Display	82"	72"	1 ¼" & 2"	36 ¾"
4' IC Display	82"	48"	1 ¼" & 2"	36 ¾"

ID Display

Multi Deck

PRODUCT OVERVIEW

Introducing our high performance open multi deck display, designed to elevate your refrigerated food presentation while maintaining optimal temperature control and energy efficiency.

Includes (5) 17 ¾” deep shelves including price tag molding as standard.

Available in 4’, 6’, 8’ and 12’ lengths.

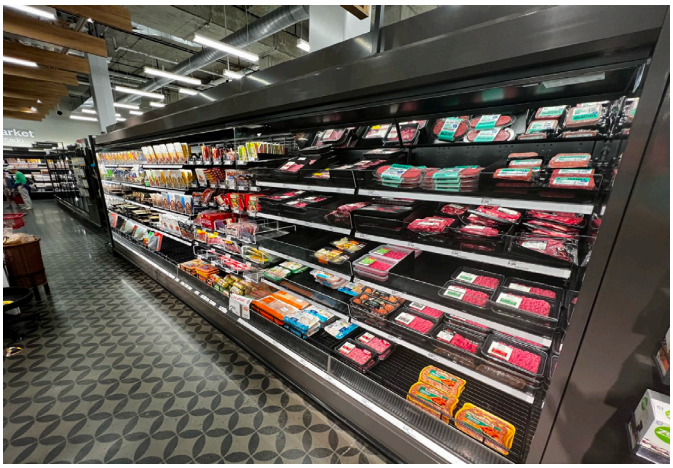

FEATURES

- Meat / Dairy / Produce – 75F @ 55%RH
- Remote, Air Cooled, and Water Cooled options
- Danfoss or RDM
- Solid or metal shelves
- Vertical lighting
- End walls specified per customer
- (5) 17 ¾” shelves
- Price tag molding and optional shelf risers
- Shelf strengtheners as standard
- EC EBM fans
- Electronic controller
- Soft close manual night-blind
- Canopy lighting
- Automatic defrost
- Multiplexable
- Solenoid valves as standard
- RAL exterior specified per customer
- RAL interior specified per customer
- End user specific colors and finishes available

DIMENSIONS

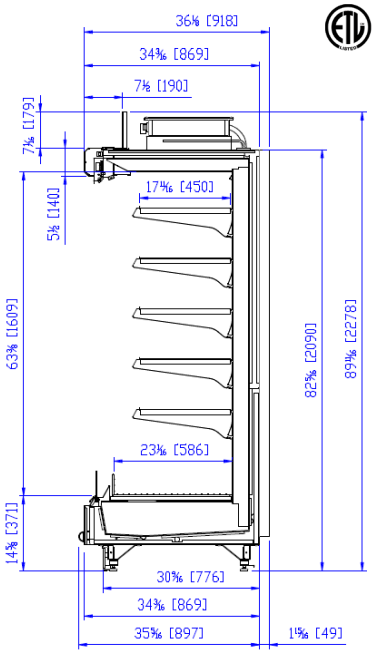

Model	Height	Width (Ex. End)	End Wall Thickness	Depth
12’ ID Display	82”	144”	1 ¼” & 2”	34 ¼”
8’ ID Display	82”	96”	1 ¼” & 2”	34 ¼”
6’ ID Display	82”	72”	1 ¼” & 2”	34 ¼”
4’ ID Display	82”	48”	1 ¼” & 2”	34 ¼”

IH Display

Multi Deck

PRODUCT OVERVIEW

Built for demanding retail environments, this full height doored multi deck offers a high-capacity, visually striking solution for refrigerated product, combing structural integrity with flexible merchandising.

Includes (5) 19 ¾” deep shelves including price tag molding as standard.

Available in 4’, 6’, 8’, and 12’ lengths.



FEATURES

- Meat 3M0 32/39F 75F 55RH / Dairy
- R744 Refrigerant
- Danfoss or RDM
- Solid metal shelves
- Vertical mullion lighting
- (5) 19 ¾” shelves
- Price tag molding, optional shelf risers
- Sliding and hinged available
- End wall specified per customer
- EC EBM fans
- Electronic controller
- Canopy lighting available
- Automatic defrost
- Multiplexable
- Solenoid valves as standard
- RAL exterior specified per customer
- RAL interior specified per customer

DIMENSIONS

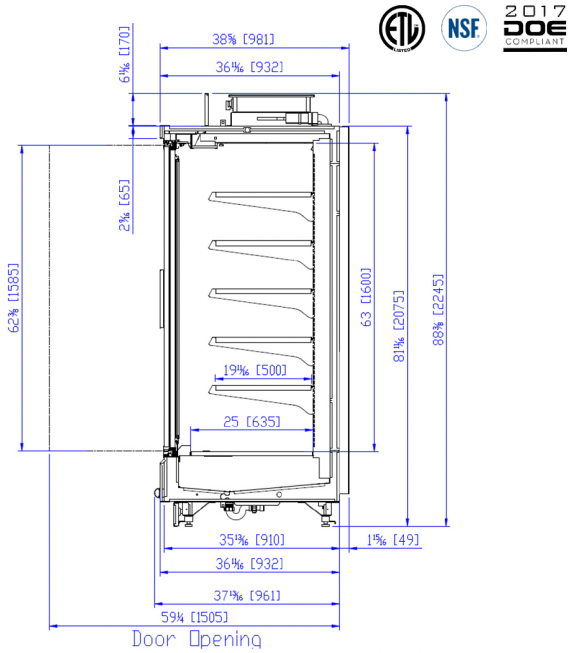

Model	Height	Width (Ex. End)	End Wall Thickness	Depth
12’ IH Display	82”	144”	1 ¼” & 2”	36 ¾”
8’ IH Display	82”	96”	1 ¼” & 2”	36 ¾”
6’ IH Display	82”	72”	1 ¼” & 2”	36 ¾”
4’ IH Display	82”	48”	1 ¼” & 2”	36 ¾”

IN Display

Multi Deck

PRODUCT OVERVIEW

The IN display is engineered to deliver high volume chilled products with a clean, structured presentation. Its robust construction and adaptable layout make it a reliable choice for supermarkets prioritizing product visibility and operational efficiency.

Includes (5) 23 ⅝" deep shelves including price tag molding as standard.



FEATURES

- Temperature range 32F/39F
- R744: Remote
- Danfoss or RDM
- Available in 12', 8', 6' and 4' lengths
- Solid or wire shelves
- Vertical LED Lighting
- End walls specified per customer
- (5) 23 ⅝" shelves
- Hinged and sliding doors available
- Price tag molding, optional shelf risers
- EC EBM fans
- Electronic controller
- Automatic defrost
- Multiplexable
- Solenoid valves as standard
- RAL exterior specified per customer
- RAL interior specified per customer

DIMENSIONS

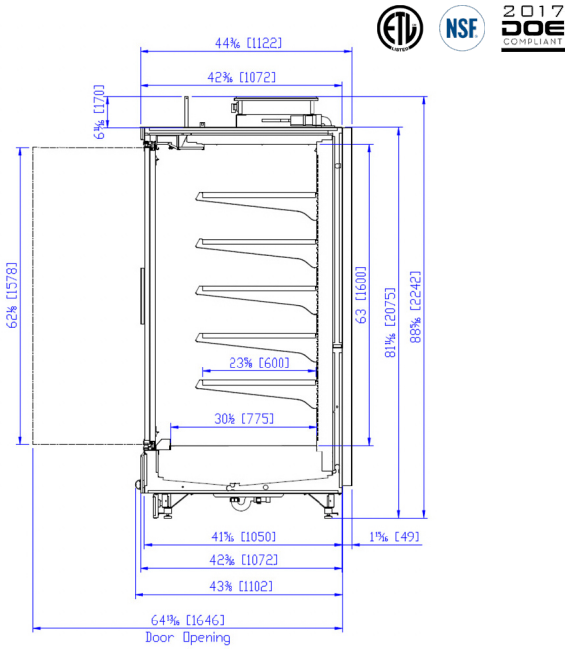

Model	Height	Width (Ex. End)	End Wall Thickness	Depth
12' IN Display	82"	144"	1 ¼" & 2"	42 ¼"
8' IN Display	82"	96"	1 ¼" & 2"	42 ¼"
6' IN Display	82"	72"	1 ¼" & 2"	42 ¼"
4' IN Display	82"	48"	1 ¼" & 2"	42 ¼"

TCA Display

Multi Deck

PRODUCT OVERVIEW

Designed with both performance and presentation in mind, the TCA is perfect for supermarkets looking to maximize product visibility, energy efficiency, and customer convenience.

Includes (5) 15 ¾" deep shelves including price tag molding as standard.

Available in 6', 8', 10', and 12' lengths. End user specific colors and finishes available.



FEATURES

- Meat 3M0 32/39F 75F 55RH / Dairy
- R449A & R290 Refrigerant
- Danfoss or RDM
- Solid or wire shelves
- End walls specified per customer
- (5) 15 ¾" shelves
- Price tag molding, optional shelf risers
- Shelf strengtheners as standard
- EC EBM fans
- Electronic controller
- Soft close manual night-blind (optional)
- LED canopy and shelf lighting
- Automatic defrost
- Multiplexable
- Solenoid valves as standard
- RAL exterior specified per customer
- RAL interior specified per customer

DIMENSIONS

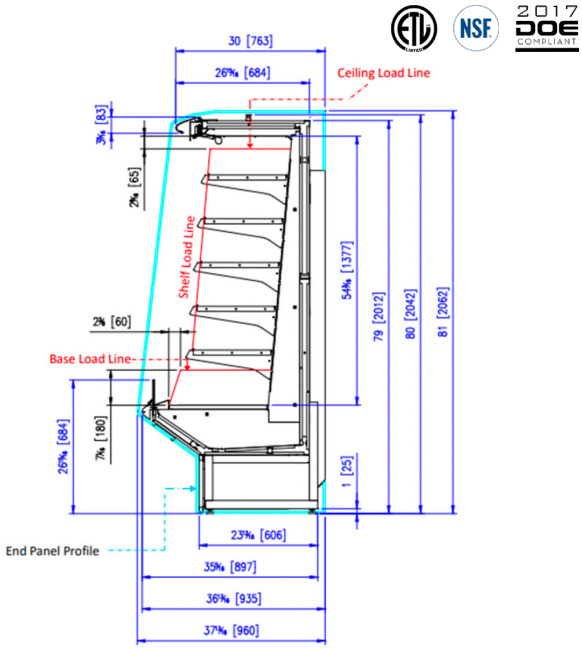

Model	Height	Width (Ex. End)	End Wall Thickness	Depth
12' TCA Display	80"	144"	1 ¼" & 2"	35 ¾"
10' TCA Display	80"	120"	1 ¼" & 2"	35 ¾"
8' TCA Display	80"	96"	1 ¼" & 2"	35 ¾"
6' TCA Display	80"	72"	1 ¼" & 2"	35 ¾"

TCL Display

Multi Deck

PRODUCT OVERVIEW

Designed with both performance and presentation in mind, the TCL is perfect for supermarkets looking to maximize product visibility, energy efficiency, and customer convenience.

Includes (3) 15 ¾" deep shelves including price tag molding as standard.

Available in 6', 8', 10', and 12' lengths. End user specific colors and finishes available.



FEATURES

- Meat 3M0 32/39F 75F 55RH / Dairy
- R449A & R290 Refrigerant
- Danfoss or RDM
- Solid or wire shelves
- End walls specified per customer
- (3) 15 ¾" shelves
- Price tag molding, optional shelf risers
- Shelf strengtheners as standard
- EC EBM fans
- Electronic controller
- Soft close manual night-blind (optional)
- LED canopy and shelf lighting
- Automatic defrost
- Multiplexable
- Solenoid valves as standard
- RAL exterior specified per customer
- RAL interior specified per customer

DIMENSIONS

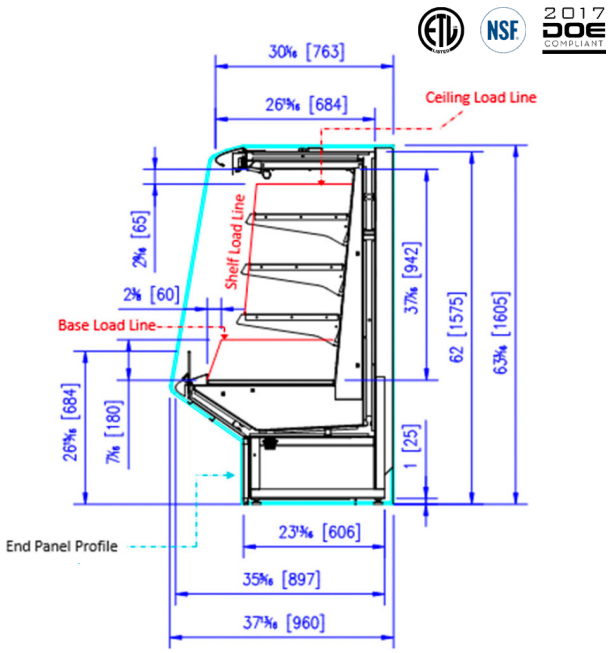

Model	Height	Width (Ex. End)	End Wall Thickness	Depth
12' TCL Display	63"	144"	1 ¼" & 2"	35 ¾"
10' TCL Display	63"	120"	1 ¼" & 2"	35 ¾"
8' TCL Display	63"	96"	1 ¼" & 2"	35 ¾"
6' TCL Display	63"	72"	1 ¼" & 2"	35 ¾"

LSICORP.COM/CARTER
800.436.7800

MANUFACTURED
IN THE USA